A.1 Ontology proposal

The following ontology proposal tries to cover all the aspects that are in the scope of the URB-Grade project. This ontology is based in those concepts that have been the pillars for the construction of the project during the definition phase. This ontology is based also in the concepts developed at the Odysseus project, which have the same domain problems. The following figure shows an overview of this ontology.

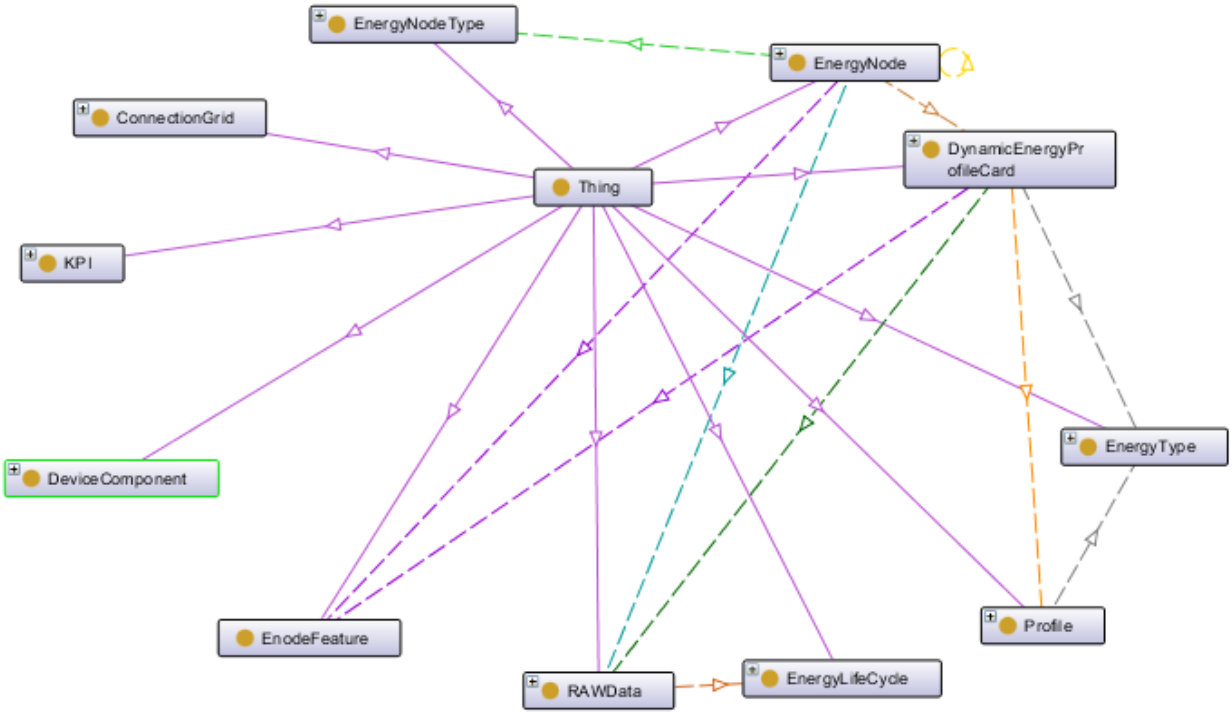

Figure 1: URB-Grade OWL ontology proposal

In the next paragraphs, all these main concepts will be introduced in detail.

A.1.1 Energy Node

The EnergyNode concept is an abstraction to cover all the grid's elements which produces, stores and/or consumes energy. By this way, both devices and locations are considered EnergyNodes. The most important characteristic of this energy node is its capacity to link with other eNodes, allowing a Russian doll approach.

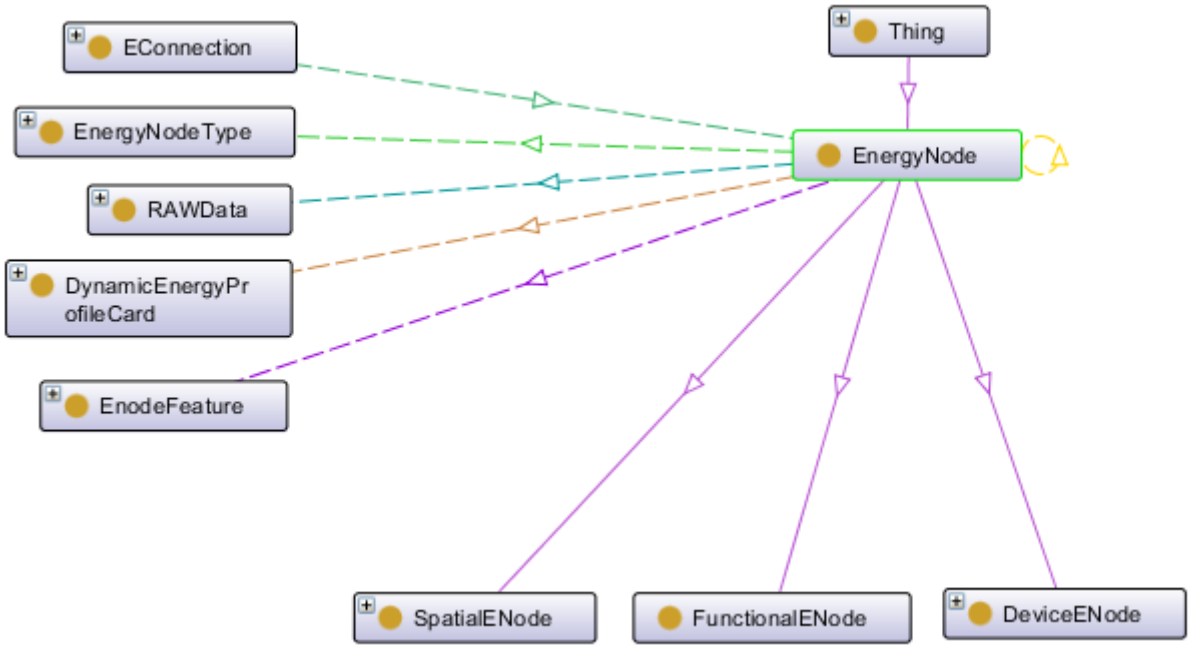

Figure 2 - EnergyNode

For the correct convenience to model all the different kinds of eNodes at the URB-Grade scope it is necessary a subclassing for these eNodes by three different ones:

- SpatialENode, which are those eNodes that define an spatial area, like a district, a neighbourhood, … At the same time, spatial eNodes are specialized in Constructed Areas and HabitedAreas.
- FunctionalENode, for those which are virtual and determines a set of eNodes that affect to a certain functional characteristic.
- DeviceENode as eNodes which are usually the end eNodes and are able to measure or act at the system.

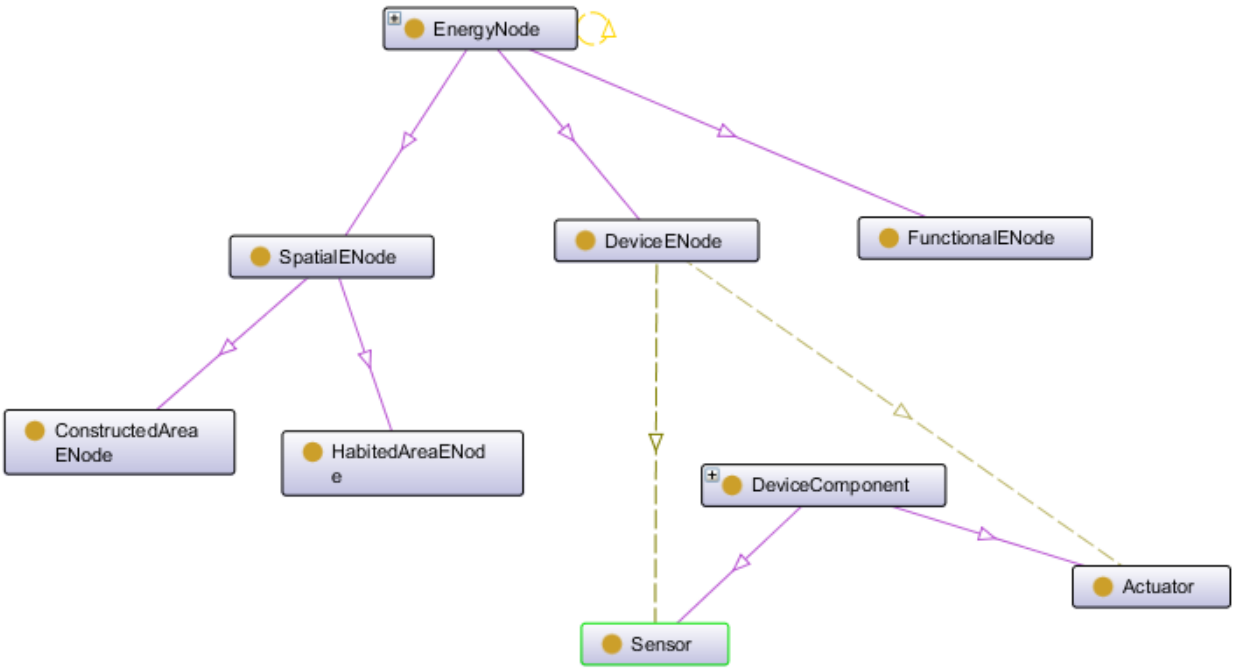

Figure 3 - Enegy Node Specialization

An important description of the eNode is its type. This entity, EnergyNodeType, is an open entity to allow different kinds of eNodes. In the case of URB-Grade, there are defined specific eNode types, like the following:

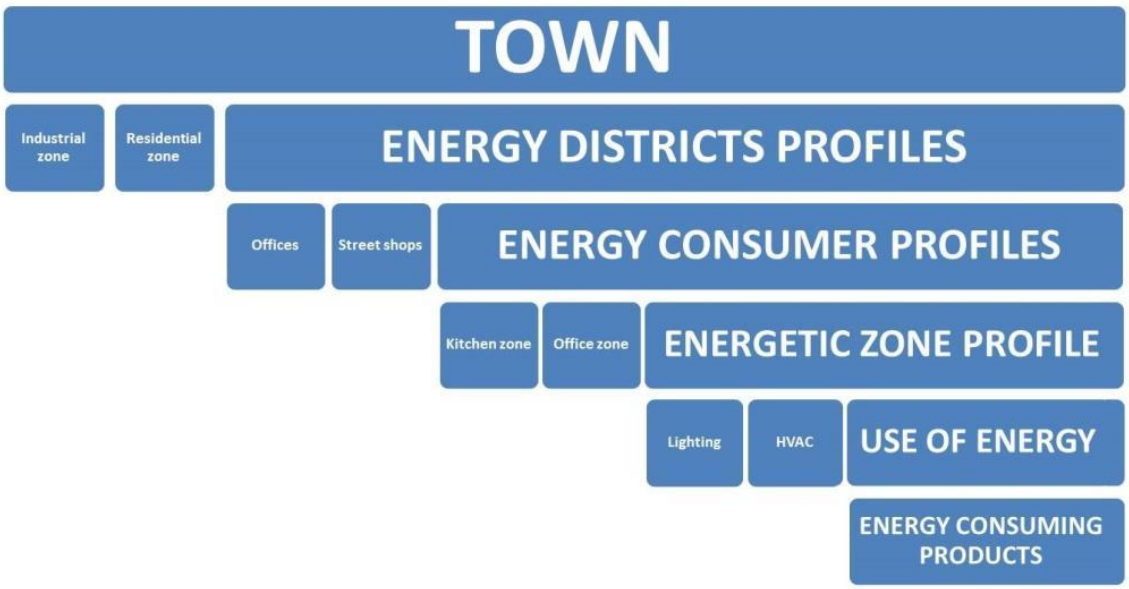

Figure 4 - Structure of Data Collection

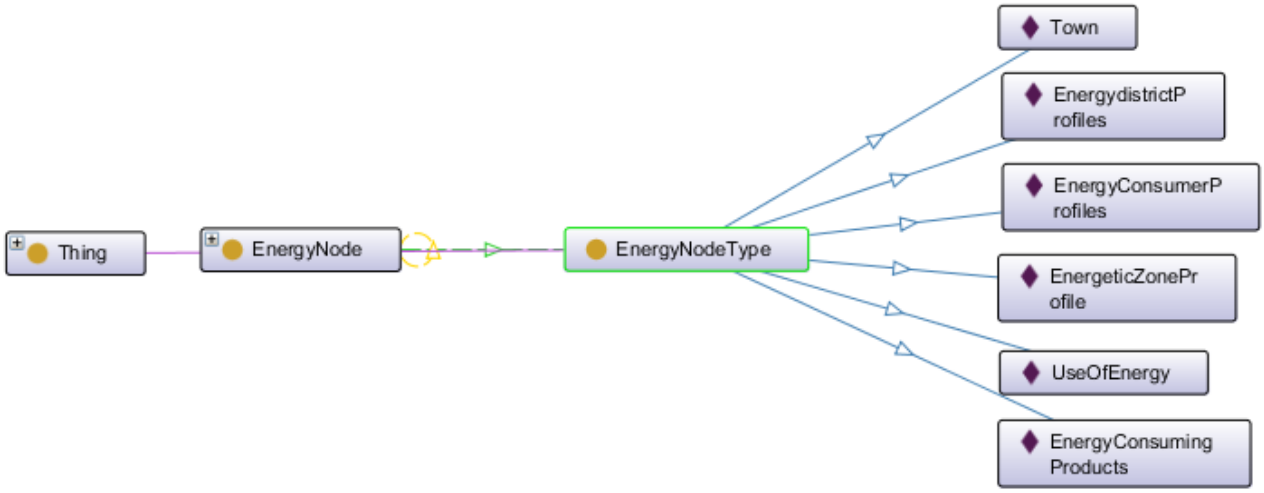

Figure 5 - Energy Nodes Types

Also important is the relation between eNodes regarding the energy interconnection. It is represented by the entity Connection Grid, which is the aggregation of an ENetwork (defined by an energy type transported) and a set of EConnection that are able to connect different EnergyNodes.

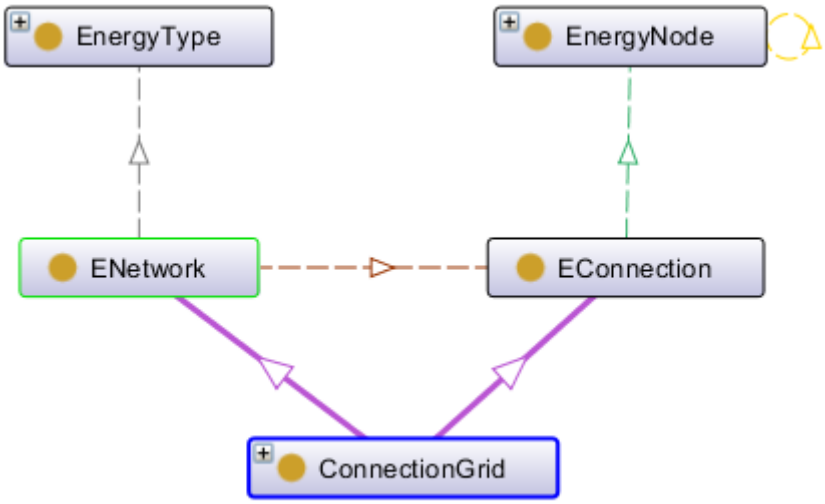

Figure 6 - Connection Grid

A.1.2 Dynamic Energy Profile Card

An Energy Node is not described completely by itself. To understand completely an eNode it is necessary to add the concept of dynamic energy profile card (dEPC). An eNode can be detailed by some dEPC, in the sense that a dEPC define the eNode from the perspective of a certain energy Type.

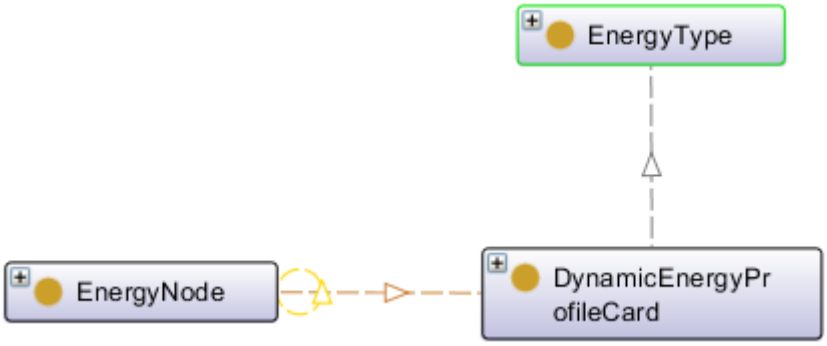

Figure 7 - Dynamic Energy Profile Card

The dEPC defines all those energy information of the dEPC. One of the most important is its characteristics as a producer, consumer or storage, linked with the use of energy.

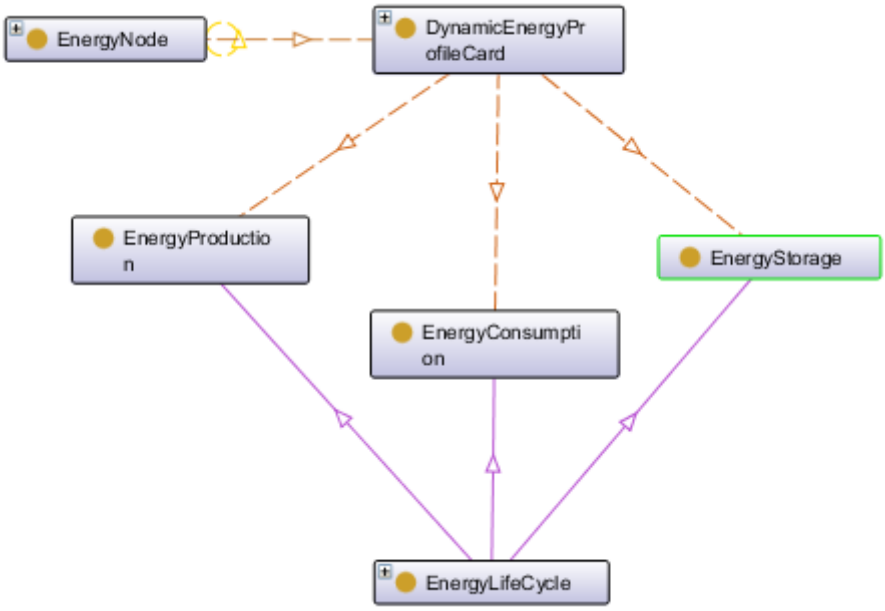

Figure 8 - Use of Energy of the dEPC

A.1.3 Sensed and enhanced information

Once detailed the definition of an eNode at the system, it's necessary to add the information that is generated in order to generate added value and obtain the necessary information that will be the input to the analysis and prediction algorithms to make decisions. This information is aggregated in the form of RAW Data. This RAW Data entity is the RAW information stored at the platform and that has been sensed in the field.

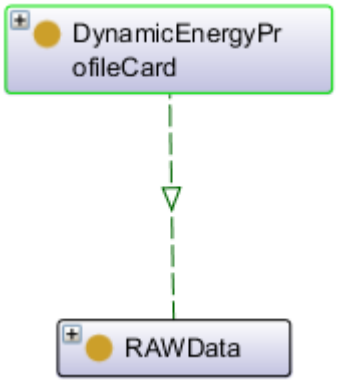

Figure 9 - RAW Data

But this RAW Data is not enough to perform a decision. It is necessary also the calculation of some Key performance indicators. These are calculated by an event launched for the incoming RAW Data, and using this information (among others) the system can generate added value to the sensed information.

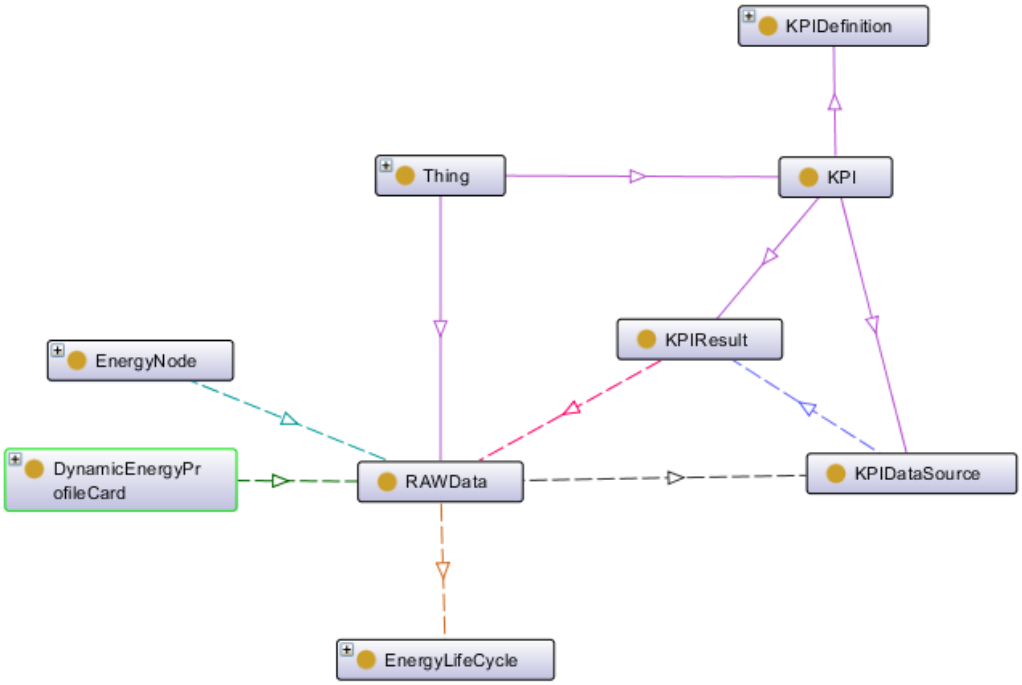

Figure 10 - KPI

A.1.4 Profiles

Profiles are one of the most important part for the dynamic behaviour of the dEPC. These are the conclusions of the information generated by an eNode. With the whole perspective of the eNode (and also the aggregation behaviour), these profiles compile information through the original RAW values and the enhanced ones (calculated by the KPIs) to present to the end user the information that will allow the decisions to improve the energy performance.

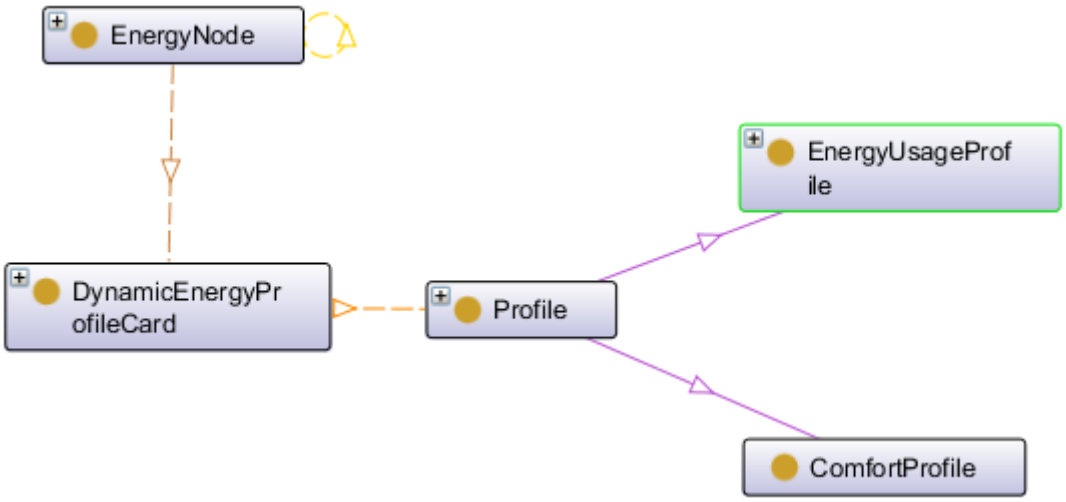

Figure 11 – Profile

At the previous figure there are shown to profiles, the EnergyUsage Profile and ComfortProfile. The first one is the most basic profile, used to obtain information of the energy use of the energy node (consumption, production or storage). On the other hand, the Comfort profile establish a threshold to be awareness about the comfort situation of a certain KPI.